rev.	revision text	rev.date	rev.by	qrv. date	qrv. by
02	general adaptification	2023-12-15	McNaab	2023-12-15	McNaab
03	center marks changed	2023-01-18	LeeDrive	2023-01-18	McNaab

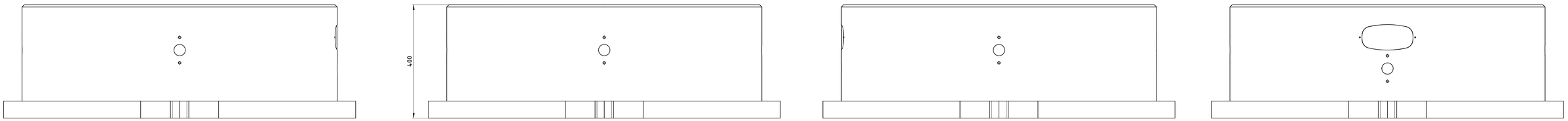

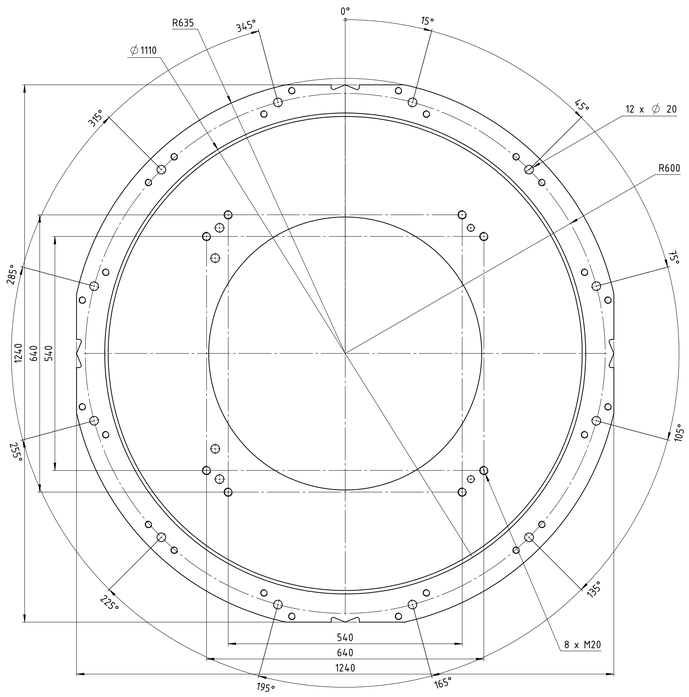

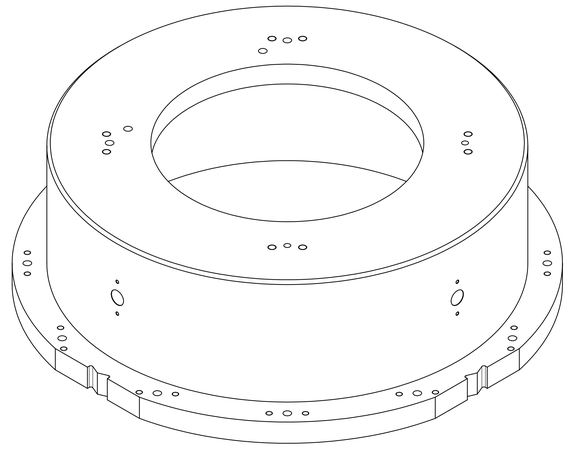

where nothing else is indicated tolerances: DIN ISO 2768-mH welding: DIN EN ISO 13920-A edges: DIN EN ISO 13715 -0.5 -0.3 -0.1	status: Released SAP EMEA no: title / description: robot stand R-400	SAP AH no: 230787	YASKAWA www.yaskawa.eu.com	dimension: 1240x1240x404 mm created: 2023-07-19 drawn: 2023-07-19 approved: 2023-07-19 drawing-no: 0001060841-100	weight: 487,628 kg McNaab McNaab RaiSeid revision: 03

CONFIDENTIAL: The reproduction, distribution and utilization of this document as well as the communication of its contents to others without express authorization is prohibited. Offenders will be held liable for the payment of damages. All rights reserved in the event of the grant of a patent, utility model or design.